Large Shopping Car Organizer Bags Grocery Foldable Front Back Seat Truck 19X10X10"

Our Product Introduction

Basic Information

- Place of Origin: CHINA
- Brand Name: OEM or ODM
- Certification: BSCI, DISNEY, ISO9001
- Model Number: CS007
- Minimum Order Quantity: 500pcs
- Price: negotiable
- Packaging Details: 1 pc bag put into 1 pc PE bag, 15 pcs each carton or customized design packaging
- Delivery Time: 30-35 Working days
- Payment Terms: L/C, , T/T, Western Union, MoneyGram, PayPal
- Supply Ability: 500000pcs per month

Product Specification

- Product Name: Foldable Front Back Seat Sea Organizer Bag
- Material: Oxford Fabric Or Customized
- Size: 19.7X10.6X10.6 Inch Or Customized
- Color: Black Or Customized
- Logo: Printing, Woven Label Or Customized
- Sample Time: 7-10 Working Days
- OEM/ODM: Welcomed
- Highlight: **car shopping bag organizer**, **large car bag organizer**, **grocery bag car organizer**

More Images

for more products please visit us on travelling-bags.com

Our Product Introduction

Product Description

Foldable Front Back Seat Truck Organizer Storage Bag Car Organizer Bag

Features

Our car truck organizer bag is made of durable oxford fabric, strong handles, sturdy mesh side pockets and reliable base plate.
It is large capacity space and it helps you organize your trunk and make your trunk have more space to store a lot.
All hardware and seams are reinforced for a long lasting bag that still looks new after repeated use.
The design of the non-slip bottom can fix the trunk organizer bag in place, when your car turns or brakes sharply, it can prevent the items of the car grocery organizer from rolling out and being damaged.
Multiple boxes are storted to store items in an orderly manner.
Unfold the SUV trunk organizer, put the base plate in it, insert the divider you want, and fix them, then you can store the items at will and keep the trunk organized.
Our trunk organizer can be easily folded and stored after finishing using it.

Product Type	Foldable Front Back Seat Sea Organizer Bag
Material	Oxford fabric or Customized
Size	19.7X10.6X10.6 Inch or Customized
Color	Black & Customized color
Logo	Printing, Woven label, Debossed PU patch, Rubber patch, Embroidery etc.
Packing	1pc/PE bag or Custom packging acceptable
Sample time	5-7 working days
Production time	30-35 working days
Payment term	T/T, Paypal, L/C (Normally 30%deposit, 70%balance payment before shipping)

Style Customization

Develop a design plan - Sign a contract - Accomplish - Product inspection - Well-built
Note: The size and the color can be customized according to customer requirements.

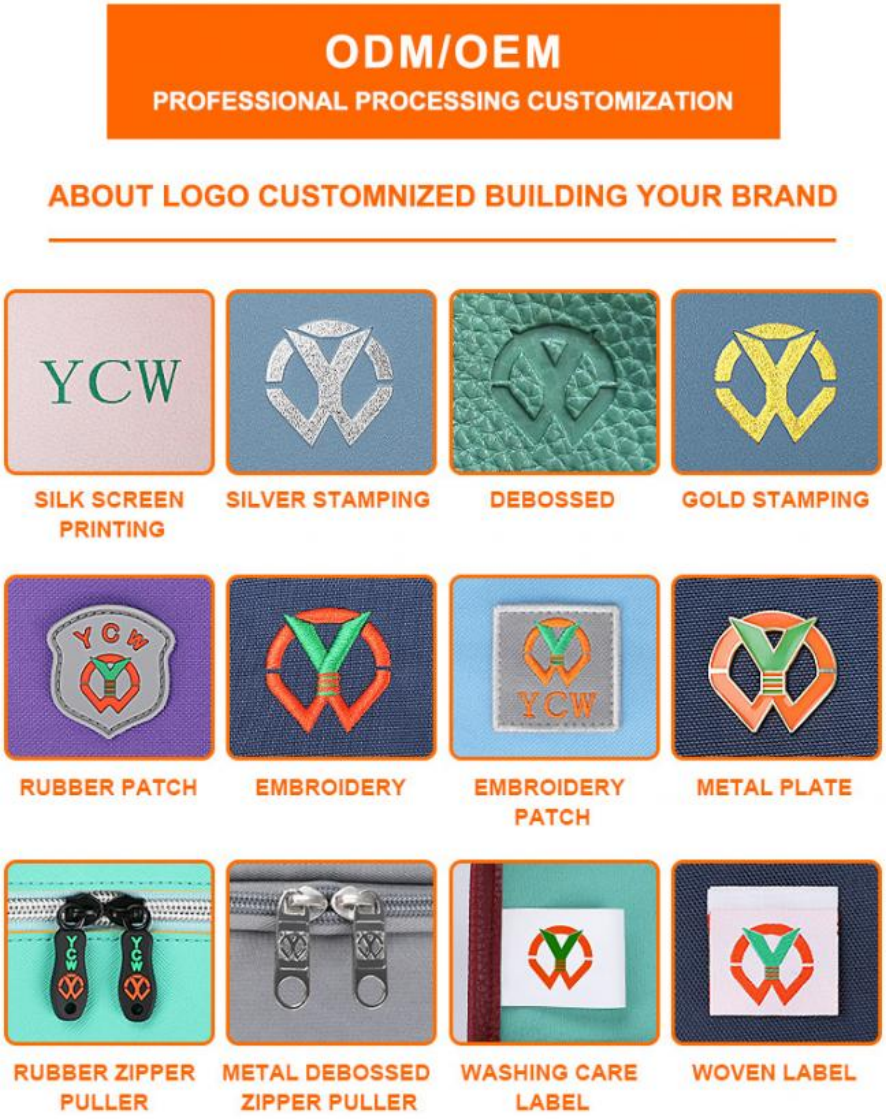

for more products please visit us on travelling-bags.com

SUPPORTING SAMPLE CUSTOMIZATION

Pickup fabric and color swatch

We can custom the sample accordingly your requirments, confirm the fabric and color to make the sample.

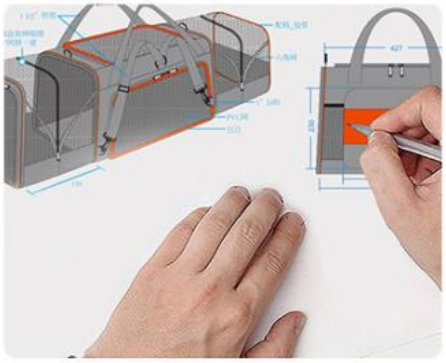

DESIGN TEMPLATE

COLOR SWATCH

Our Advantage

15 years waist bag or other bag experience, provide you our best business experience.
Well trained workers can give you the highest quality bag.
Over than 500 workers, can finish your orders on time.
Professional Designer, can help you make your own design and logo.
Many materials and color options, can meet all your requirements.
Strict QC process, none defect product will be passed to clients.

Suitable Size for Car
27cm/10.6in
27cm/10.6in
5cm/2in
27cm/10.6in
50cm/19.7in
27cm/10.6in

Brilliant Features
Inner Cloth Pocket
Inner Mesh Pocket
Portable belt
External Mesh Pocket
Velcro at the bottom
Waterproof

FAQ
Q: Are you a manufacturer factory or a trading company?
A: We are direct OEM & ODM manufacturer factory and exporter.

Q: Can I get a sample first?
A: Yes, the sample can be provide based on your requirements.

Q: What materials can I choose for bag?
A: We can do large kind of various, materials, and different materials have different features and costs, please contact with us to check directly.

Q: Could you provide the design for me?
A: Custom designs are welcomed! The bag struture material, quantity and packaging are all the factors could affect the price, please conact with us directly.

Q: How do you ensure the quality?
A: We control the quality from in-material / accessories / online QC / final products QC/ QC before shipping, and we do 100%quality control for our customers, we also accept 3rd party inspection institution you assigned to test.

Shenzhen Yu Chuang Wei Industrial Co., Ltd.

8613632735296 mirror@szycw918.com travelling-bags.com

No. 76, Zhangbei Road,Longgang District, Shenzhen,518172,Guangdong,China.